THIS COPY IS PROVIDED ON A RESTRICTED BASIS AND IS NOT TO BE USED IN ANY WAY DETRIMENTAL TO THE INTERESTS OF PANDUIT CORP.

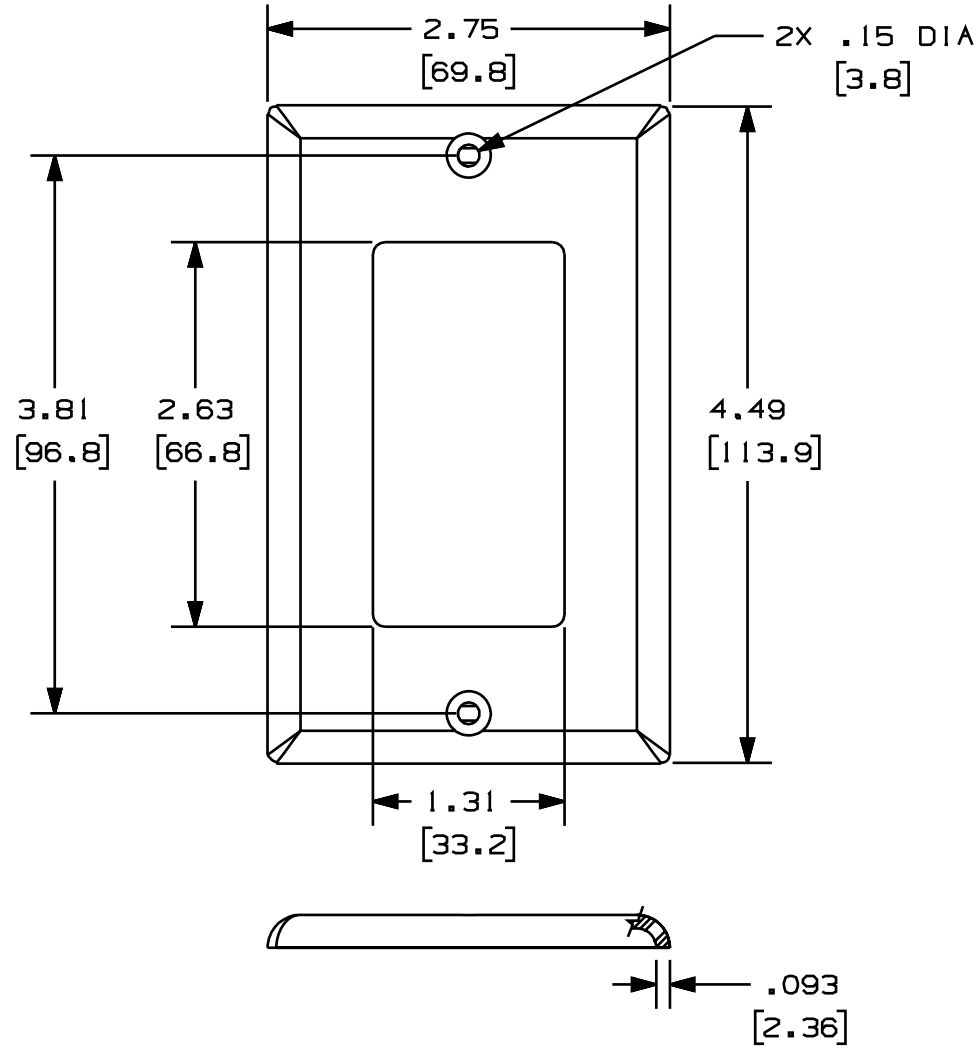

PANDUIT P/N	WEIGHT
CPG**	.34 LB/10 PCS (152 g/10 PCS)

NOTES:

**1. SEE CURRENT CATALOG FOR ADDITIONAL PART NUMBER SUFFIXES TO INDICATE COLOR AND OR PACKAGE QUANTITY.
2. TWO (2) #6-32 X 1/4" SLOTTED OVAL HEAD SCREWS ARE INCLUDED WITH THIS PART.
3. DIMENSIONS IN PARENTHESES ARE IN METRIC.
4. PART ACCEPTS 3 TYPES OF GFCI MODULE FRAMES, CFG1, CFG2, AND CFG4.

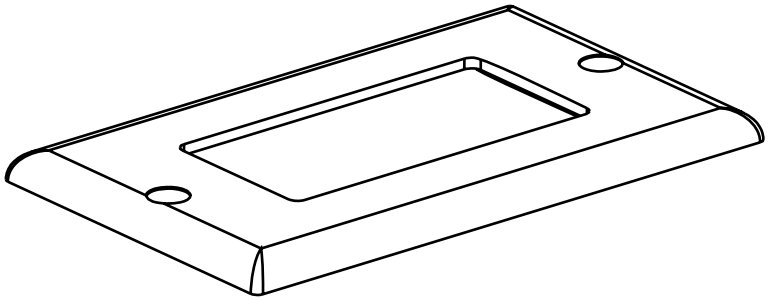

REV	DATE	BY	CHK	DESCRIPTION	ECN	CHK	CUST	SUP
R	08-22-97	RCA		RELEASED TO PRODUCTION.	00122-02			

CAD FILENAME/LAYERS: M00122BA_DC_00A.PRT

PANDUIT CORP. TINLEY PARK, ILLINOIS

DESIGNER SERIES "GFCI" FACEPLATE (CPG**)
CUSTOMER DRAWING

UNLESS OTHERWISE SPECIFIED, DIMENSIONAL TOLERANCES ARE:
(.X) ± (.XXX) ±.010(.3)
(.XX) ±.03(.8) ANGLES ±

UNLESS OTHERWISE SPECIFIED, ALL DIMENSIONS ARE GIVEN IN INCHES, THIRD ANGLE PROJECTION.

DRAWN BY: RCA
DATE: 08-22-97
CHECKED BY:
MAT'L: ABS
SCALE: NONE
DRAWING NO.: 00122-02
DWG SIZE: A